1506A-E88TAG3

1500 Series

244 kWm standby @ 1500 rpm
278 kWm standby @ 1800 rpm

Basic technical data

Number of cylinders. 6
Cylinder arrangement .. .. Inline
Cycle ... ...4 stroke
Induction system.. ... ... Air to air after cooled, turbocharged
Compression ratio 16.1:1
Bore . ... 112 mm (4.41 inches)
Stroke .. .. 149 mm (5.87 inches)
Displacement... ... ... 8.8 litres (537.0 inches³)
Direction of rotation.. ... . Anticlockwise facing flywheel
Firing order (number 1 cylinder furthest from flywheel) 1, 5, 3, 6, 2, 4
Estimated total weight of ElectropaK (dry) ... ... 1135 kg
Estimated total weight of ElectropaK (wet)... ... ...1201 kg

Overall dimensions

Length, front of radiator to rear of air cleaner .. .. 1941 mm
Width ... ... 1013 mm
Height, including radiator support brackets . ... 1366 mm

Moments of rotational inertia (mk²)

Engine . ... .0.7361 Nms²
Flywheel SAE14 .. .. 1.667 Nms²

Centre of gravity

Forward of rear face of cylinder block.. ... ...413 mm
Above crankshaft centre line.. ... ...231 mm
Offset RHS of centre line ... ...-1 mm

Performance

All ratings certified to within . ... ± 3%
Speed variation at constant load... ... ...± 0.25%

Note: Data based on ISO/TR14396, SAE J1995 3.1, ISO3046-1.

Note: Engine speed control in accordance with BS5514 pt.4; ISO3046-4 and ISO8528-5

Note: Electrical ratings are based on average alternator efficiency and are for guidance only

Test conditions

Air temperature . ... 25°C
Barometric pressure.. ... ... 100 kPa
Relative humidity... ... ... 35%
Air inlet restriction at maximum power (nominal) .. .. 3.7 kPa
Exhaust back pressure at maximum power (nominal) .. .. 10 kPa
Fuel temperature (inlet pump)... ... ... 40°C

Note: If the engine is to operate in ambient conditions other than those of the test conditions, suitable adjustments must be made for these changes.

For full details, contact Perkins Technical Service Department.

Publication No. TPD1951E4, January 2016.

Copyright © 2016 Perkins Engines Company Limited, all rights reserved. No part of this document may be reproduced in any form or by any means, without prior written permission of Perkins Engines Company Limited. The information in this document is substantially correct at the time of printing and may be altered subsequently.

Perkins Engines Company Limited
Peterborough, PE1 5FQ, United Kingdom
Tel: +44 (0)1733 583000
Fax: +44 (0)1733 582240
www.perkins.com

Perkins®
THE HEART OF EVERY GREAT MACHINE

General installation

1506A-E88TAG3

Designation	Units	Type of operation and application			
		Standby power	Prime power	Standby power	Prime power
		50 Hz @ 1500 rpm		60 Hz @ 1800 rpm	
Gross engine power	kWb	258	236	297	270
Fan power	kWm	8	8	13	13
Restrictions and other losses	kWm	4.9	4.5	5.5	5.1
ElectropaK nett engine power	kWm	245	223	279	252
Gross BMEP	kPa	2345	2145	2250	2045
Combustion air flow	m³/min	15.0	14.1	19.8	18.6
	kg/hr	1063	1001	1402	1314
Exhaust gas temperature after turbocharged (maximum)	°C	558	537	496	477
Exhaust gas flow, wet	m³/min	40.4	37.5	48.9	45.3
	kg/hr	1115	1048	1462	1368
Boost pressure ratio		3.0	2.8	3.3	3.0
Overall thermal efficiency (nett)	%	42	42	42	42
Mean piston speed	m/s	7.4	7.4	8.9	8.9
Engine coolant flow	l/min	140	140	190	190
Cooling fan air flow	m³/min	370	370	482	482
Typical generator set electrical output (0.8pf)	kWe	226	206	256	232
	kVA	282	257	320	290
Assumed alternator efficiency	%	92	92	92	92

Energy balance

Designation	Unit	Standby power	Prime power	Standby power	Prime power
		50 Hz @ 1500 rpm		60 Hz @ 1800 rpm	
Energy in fuel	kWt	590	560	688	634
Energy in power output nett (at shaft)	kWb	245	223	279	252
Energy restrictions and other losses	kWb	4.9	4.5	5.5	5.1
Energy to coolant	kWt	112	110	120	115
Energy to exhaust	kWt	178	176	209	196
Energy to ACC	kWt	35	31	55	46
Energy to cooling fan	kWm	8	8	13	13
Energy to radiation	kWt	7	7	7	7

Note: The above data is based on 42,770KJ/Kg calorific value for diesel conforming to specification BS2869 Class A2.

Rating definitions

Prime power

Variable load. Unlimited hours usage with an average load of 70% of the published prime power rating. A 10% overload is available for 1 hour in every 12 hour of operation.

Standby power

Variable load. Limited to 500 hours annual usage up to 300 hours of which may be continuous running. No overload is permitted.

Publication No. TPD1951E4, January 2016.

Copyright © 2016 Perkins Engines Company Limited, all rights reserved. No part of this document may be reproduced in any form or by any means, without prior written permission of Perkins Engines Company Limited. The information in this document is substantially correct at the time of printing and may be altered subsequently.

Perkins Engines Company Limited
Peterborough, PE1 5FQ, United Kingdom
Tel: +44 (0)1733 583000
Fax: +44 (0)1733 582240
www.perkins.com

Perkins®
THE HEART OF EVERY GREAT MACHINE

Cooling system

Total coolant capacity.. ... ... .29.6 litres
Engine ... ... 13.9 litres
Radiator .. .. 12.6 litres
Pipes and hoses . ... 3.08 litres
Maximum top tank temperature .. .. .107°C
Maximum static pressure head on pump. ... ... .N/A kPa
Thermostat operating range ... ... 87 - 98°C
Coolant flow, against 30 kPa restriction @ 1500 rpm ... .. .140 litres/min
Coolant flow, against 30 kPa restriction @ 1800 rpm ... .. .190 litres/min
Maximum temperature rise across the engine ... ... .N/A°C

Radiator

Radiator face area... ... ...0.49 m²
Number of rows and material 4/Aluminium
Fins per inch and material ... ... .10 FPI
Pressure cap setting (minimum)... ... ...110 kPa

Charge cooler

Face area ... ... .0.26 m²
Number of rows and material 2/Aluminium
Fins per inch and material ... ... .10 FPI

Width and height of matrix

Height .. .. 1172 mm
Width ... ... 900 mm
Weight of cooling pack (dry) ... ... .84 kg

Coolant pump

Method of drive ... ...Belt driven

Fan type/details

Diameter .. ..813 mm (32 inches)
Drive ratio 1:1
Material ... ... Plastic
Number of blades 9
Pusher/puller ... ... Pusher
Cooling fan air flow @ 1500 rpm ... ... 370 m³/min
Cooling fan air flow @ 1800 rpm . ... .482 m³/min

Duct allowance

Ambient cooling clearance (standby power) based on air temperature at fan of 7°C above the ambient.

Maximum additional restriction (duct allowance) to cooling airflow and resultant minimum airflow.

Description	@ 1500 rpm	@ 1800 rpm
Ambient clearance	51°C	54°C
Duct allowance	125 Pa	
Minimum airflow at conditions	370 m³/min	482 m³/min

Normal operating angles:

Front and rear.. ... ... ± 7°
Side tilt. ... ... ± 7°

Fuel system

Recommended fuel to conform to BS 2869 1998 CLASS A2 or BSEN590.

Injection system ... ... Direct
Injector type... ... ... Hydraulically Actuated Electronically Controlled Unit Injector
Governor type ... ... Electronic
Injector pressure ... ...185 MPa
Lift pump type ... ...Gear
Lift pump fuel delivery @ 1500 rpm .. .. 38 litres/hour
Lift pump delivery pressure... ... ... 140-655 kPa
Maximum suction head at pump inlet ... ... 60.9 kPa
Maximum static pressure head. ... ... 4 m
Maximum fuel inlet temperature. ... ... 79°C
Fuel filter spacing.. ... ... 4 Microns
Tolerance on fuel consumption .. .. ± 5%

Fuel consumption

Note: All figures based on gross engine power and assumed fuel density of 0.85 kg/litre.

1506A-E88TAG3

Rating	1500 rpm		1800 rpm	
	g/kWh	litres/hr	g/kWh	litres/hr
Standby	199.9	60.7	199.5	69.8
Prime	199.4	55.5	198.5	63.1
75% prime	199.3	41.6	199.3	47.5
50% prime	207.9	28.9	208.4	33.1

Induction system

Maximum air intake restriction of engine:
Clean filter. ... ... 3.7 kPa
Dirty filter... ... ... 6.2 kPa
Induction indicator setting . ... 7.5 kPa
Air filter type .. .. Dry paper element

Publication No. TPD1951E4, January 2016.

Copyright © 2016 Perkins Engines Company Limited, all rights reserved. No part of this document may be reproduced in any form or by any means, without prior written permission of Perkins Engines Company Limited. The information in this document is substantially correct at the time of printing and may be altered subsequently.

Perkins Engines Company Limited
Peterborough, PE1 5FQ, United Kingdom
Tel: +44 (0)1733 583000
Fax: +44 (0)1733 582240
www.perkins.com

Perkins®
THE HEART OF EVERY GREAT MACHINE

Lubrication system

Total lubrication system capacity (dry engine) ... 41 litres
Total lubrication system capacity (oil change). ... 39 litres
Sump capacity only ... 36 litres
Oil temperature (in sump) maximum... 120°C
Oil temperature (in sump) normal continuous operation ... 115°C
Lubricating oil pressure at bearings. ... 370 kPa
Minimum oil pressure ... 250 kPa
Oil relief opens at. ... 662 kPa
Oil filter screen spacing ... 23 Microns
Lubricating oil flow ... 200 litres/min
Oil consumption (highest rating) ... <0.1% of fuel

Electrical system

Type (grounding)... Negative ground
Alternator type... 20SI 24 volts
Alternator voltage... 24 volts
Alternator output ... 45 amps
Starter type ... Electric
Starter motor voltage ... 24 volts
Starter motor power ... 5.3 kW or 6 kW
Number of teeth on flywheel ... 113
Number of teeth on starter pinion ... 11
Minimum mean cranking speed ... 100 rpm
Starter solenoid maximum pull-in current @ 20°C ... 215 amps
Starter solenoid maximum hold-in current @ 20°C ... 6 amps

Cold start recommendations at -20°C

Oil SAE ... 0W-30
Starter type... 1 x 24 volts
Battery... 24 volts
Maximum breakaway current. ... 998 amps
Cranking current... 243 amps

Starting aids

Block temperature. ... 45°C

Exhaust system

Maximum back pressure for total system... 10 kPa

Engine mountings

Maximum static bending moment at rear face of block. ... 3134 Nm
Maximum permissible overhung load on flywheel ... 464 kg (at a distance of 65 mm)

Load acceptance (cold)

1506A-E88TAG3

Rating	Prime %	kWe	Transient frequency deviation, %	Frequency recovery time, seconds
50 Hz/1500 rpm	65	130	9.5	3.0
60 Hz/1800 rpm	67	150	8.7	2.5

Note: The information shown above complies with the requirements of ISO 8528-5 stated G2 operating limits.

The figure shown in the table above were obtained under the following test conditions:

Minimum engine block temperature ... 45°C
Alternator efficiency @ 1500 rpm ... 93.8%
Alternator efficiency @ 1800 rpm ... 94.1%
Ambient temperature ... 25°C
Governing mode ... Isochronous
Typical alternator inertia ... 3.3759 kgm²
Under frequency roll off (UFRO) set to @ 1500 rpm ... 49.5 Hz
Under frequency roll off (UFRO) set to @ 1800 rpm ... 59.5 Hz
Alternator manufacturer ... Leroy Somer
Alternator model ... LSA46.2VL12

Note: All tests were conducted using an engine installed and serviced to Perkins Engines Company Limited recommendations.

The information given on this technical data sheet is for guidance only. For ratings other than shown, installation guidance, please contact Perkins Engines Company Limited, United Kingdom.

Publication No. TPD1951E4, January 2016.

Copyright © 2016 Perkins Engines Company Limited, all rights reserved. No part of this document may be reproduced in any form or by any means, without prior written permission of Perkins Engines Company Limited. The information in this document is substantially correct at the time of printing and may be altered subsequently.

Perkins Engines Company Limited
Peterborough, PE1 5FQ, United Kingdom
Tel: +44 (0)1733 583000
Fax: +44 (0)1733 582240
www.perkins.com

Perkins®
THE HEART OF EVERY GREAT MACHINE

Noise data

Noise levels

The figures for total noise levels are typical for an engine running at the standby continuous baseload power rating in a semi-reverberant environment and measured at a distance of one meter from the periphery of the engine (sound pressure level re: -20×10^{-6} Pa. Ambient noise level load with open set at 264kWe, standby @ 1500 rpm. All value measured at Sound Pressure Levels (SPL).

Position	Noise, dB(A)
1	96.7
2	98.1
3	93.8
4	97.7
5	102.2

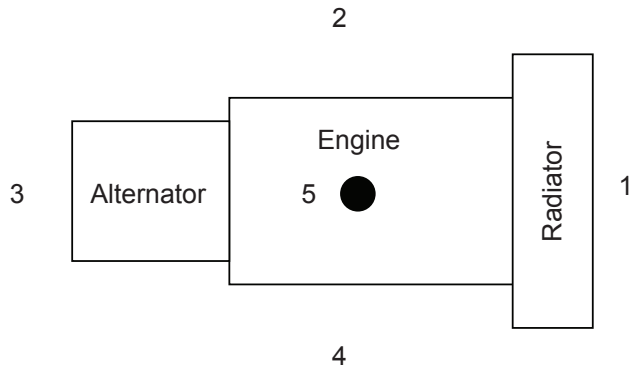

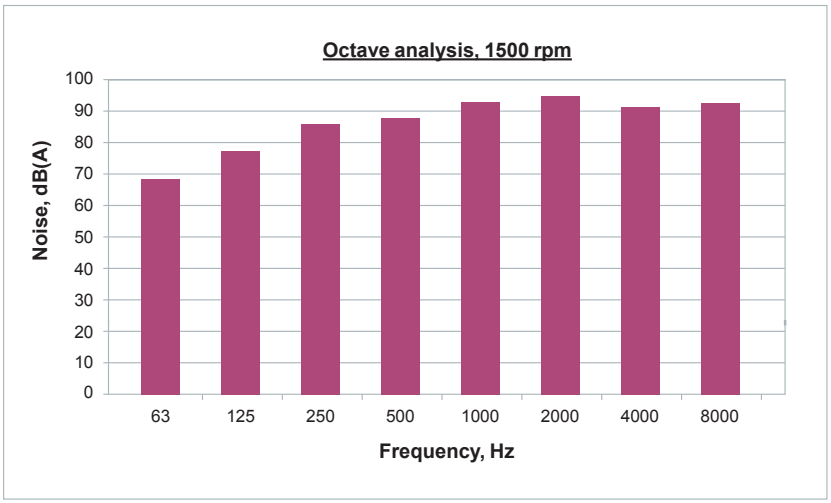

Frequency, Hz	Noise, dB(A)
63	69.2
125	77.7
250	86.4
500	87.0
1K	92.2
2K	93.3
4K	90.5
8K	91.0

Publication No. TPD1951E4, January 2016.

Copyright © 2016 Perkins Engines Company Limited, all rights reserved. No part of this document may be reproduced in any form or by any means, without prior written permission of Perkins Engines Company Limited. The information in this document is substantially correct at the time of printing and may be altered subsequently.

Perkins Engines Company Limited
Peterborough, PE1 5FQ, United Kingdom
Tel: +44 (0)1733 583000
Fax: +44 (0)1733 582240
www.perkins.com

Perkins®
THE HEART OF EVERY GREAT MACHINE

1506A-E88TAG3 - Front view

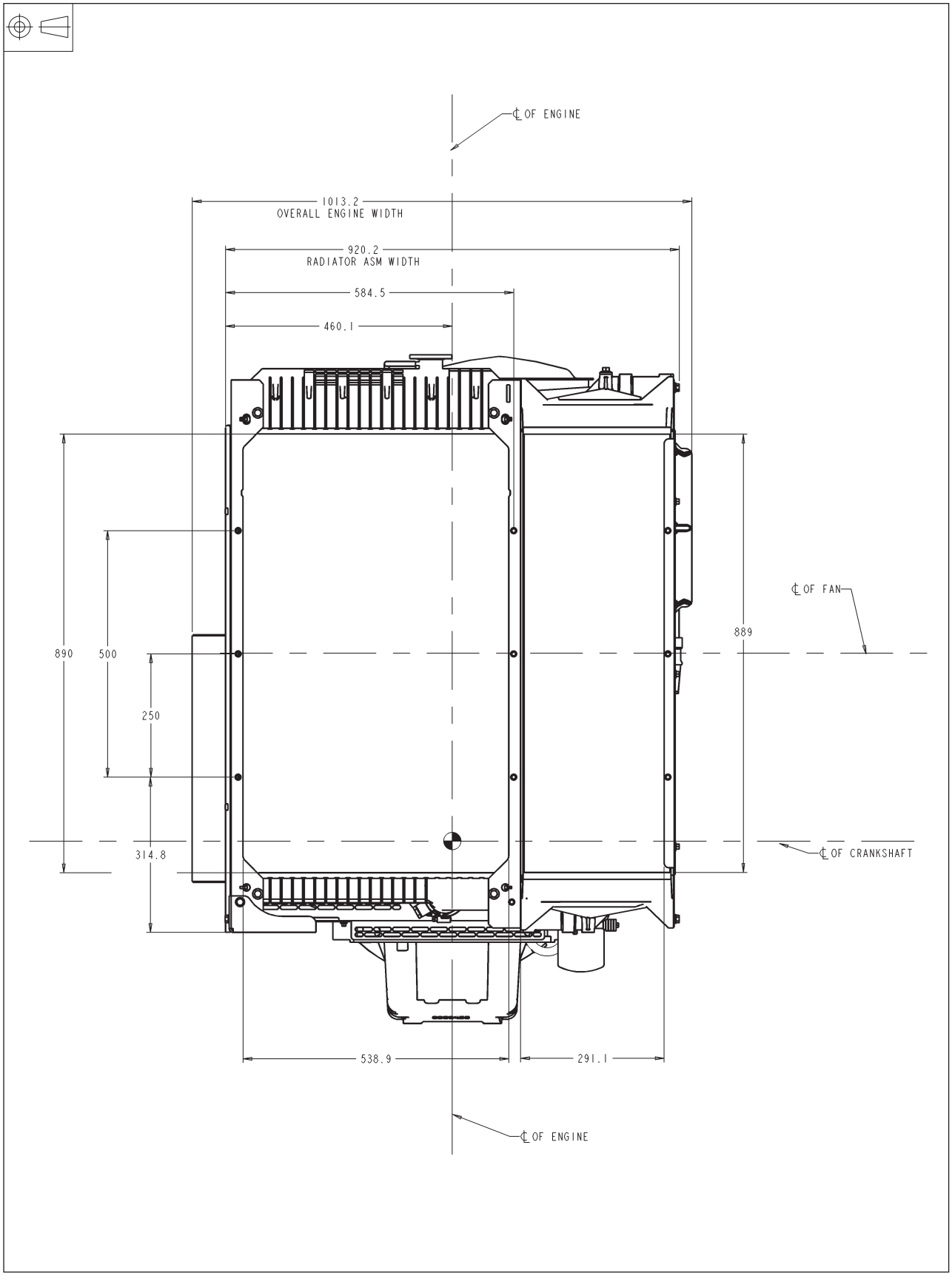

Publication No. TPD1951E4, January 2016.

Copyright © 2016 Perkins Engines Company Limited, all rights reserved. No part of this document may be reproduced in any form or by any means, without prior written permission of Perkins Engines Company Limited. The information in this document is substantially correct at the time of printing and may be altered subsequently.

Perkins Engines Company Limited
Peterborough, PE1 5FQ, United Kingdom
Tel: +44 (0)1733 583000
Fax: +44 (0)1733 582240
www.perkins.com

Perkins®
THE HEART OF EVERY GREAT MACHINE

1506A-E88TAG3 - Right side view

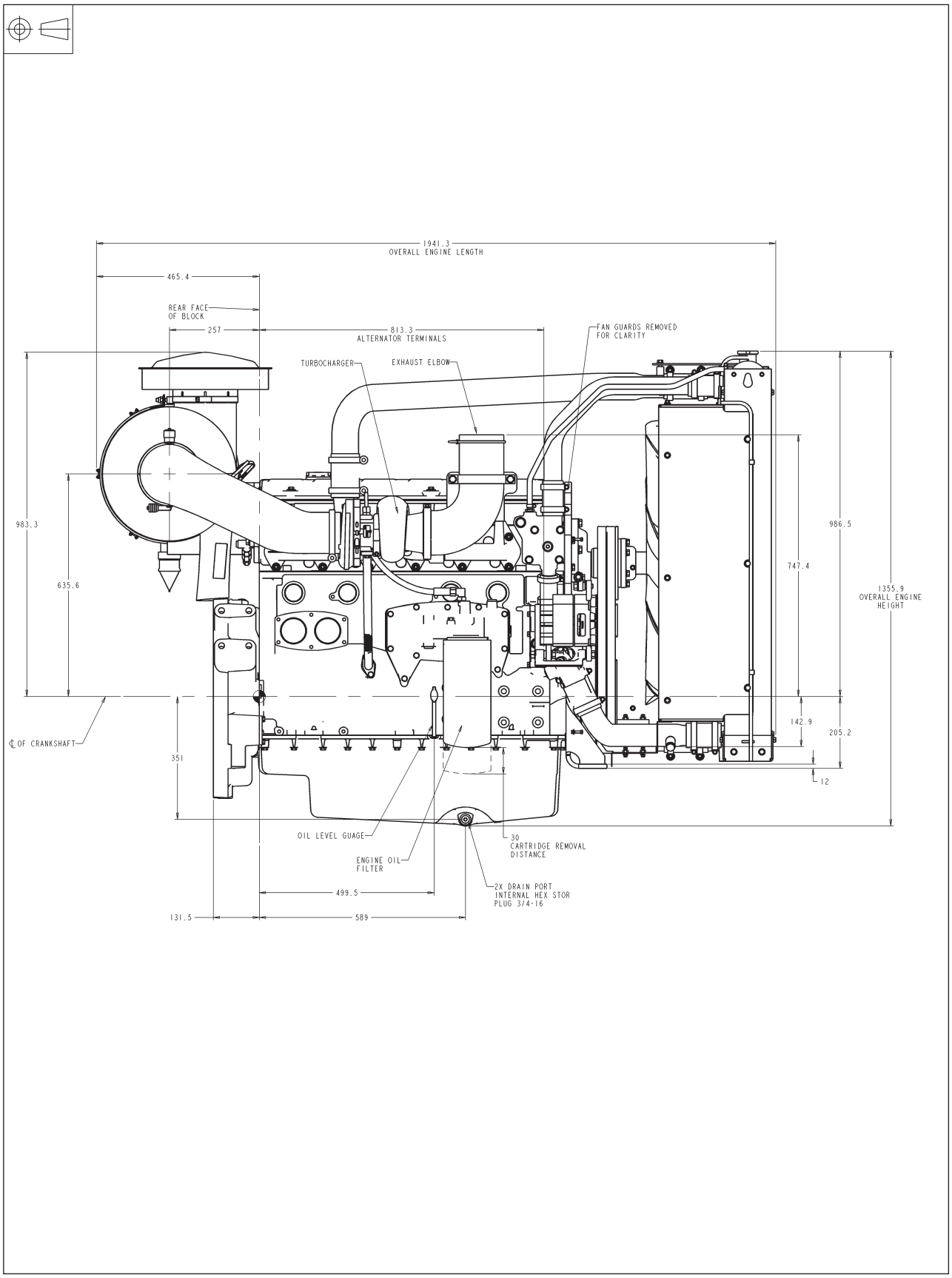

Publication No. TPD1951E4, January 2016.

Copyright © 2016 Perkins Engines Company Limited, all rights reserved. No part of this document may be reproduced in any form or by any means, without prior written permission of Perkins Engines Company Limited. The information in this document is substantially correct at the time of printing and may be altered subsequently.

Perkins Engines Company Limited
Peterborough, PE1 5FQ, United Kingdom
Tel: +44 (0)1733 583000
Fax: +44 (0)1733 582240
www.perkins.com

Perkins®
THE HEART OF EVERY GREAT MACHINE

1506A-E88TAG3 - Rear view

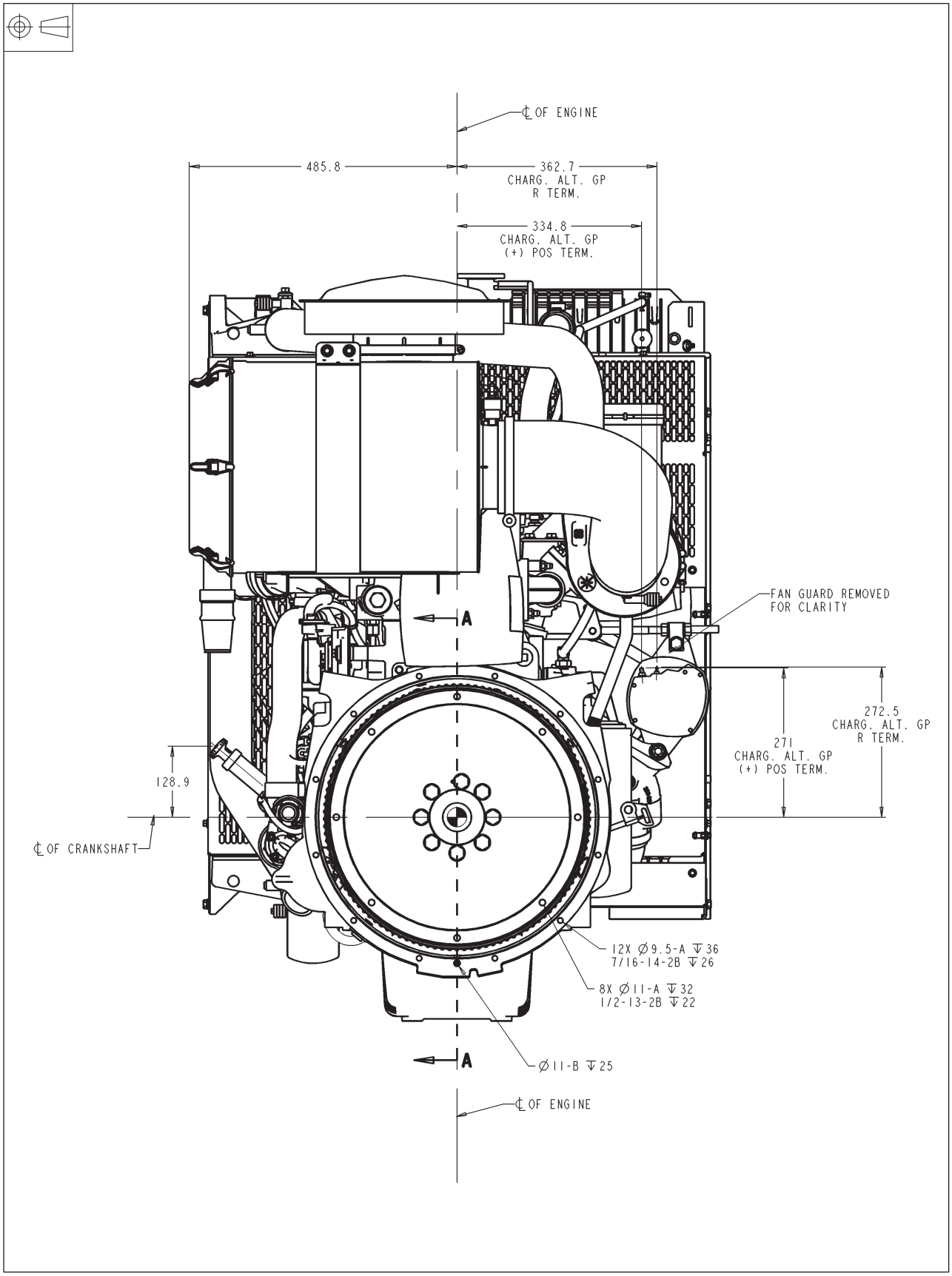

Publication No. TPD1951E4, January 2016.

Copyright © 2016 Perkins Engines Company Limited, all rights reserved. No part of this document may be reproduced in any form or by any means, without prior written permission of Perkins Engines Company Limited. The information in this document is substantially correct at the time of printing and may be altered subsequently.

Perkins Engines Company Limited
Peterborough, PE1 5FQ, United Kingdom
Tel: +44 (0)1733 583000
Fax: +44 (0)1733 582240
www.perkins.com

Perkins®
THE HEART OF EVERY GREAT MACHINE

1506A-E88TAG3 - Plan view

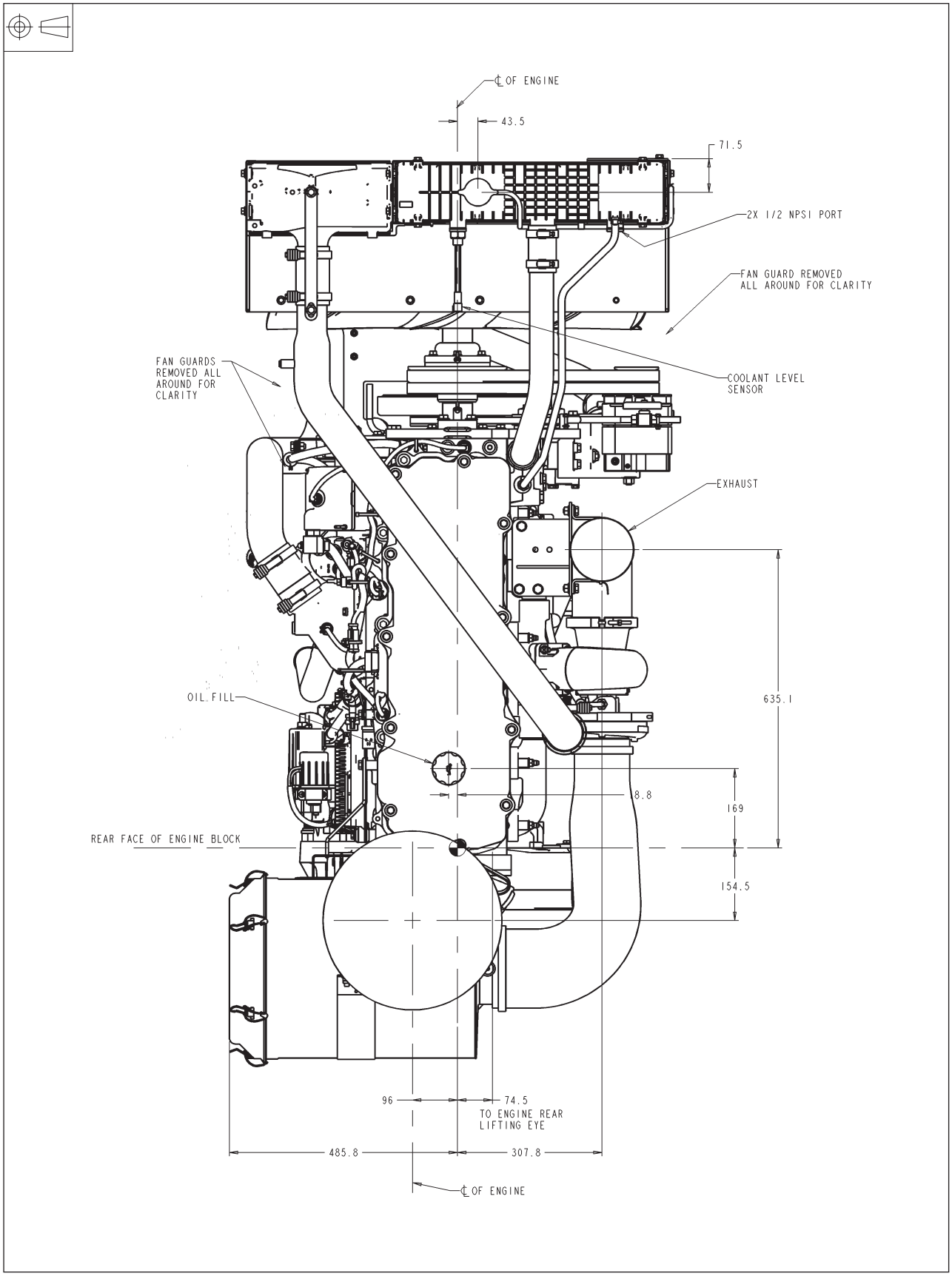

Publication No. TPD1951E4, January 2016.

Copyright © 2016 Perkins Engines Company Limited, all rights reserved. No part of this document may be reproduced in any form or by any means, without prior written permission of Perkins Engines Company Limited. The information in this document is substantially correct at the time of printing and may be altered subsequently.

Perkins Engines Company Limited
Peterborough, PE1 5FQ, United Kingdom
Tel: +44 (0)1733 583000
Fax: +44 (0)1733 582240
www.perkins.com

Perkins®
THE HEART OF EVERY GREAT MACHINE

1506A-E88TAG3 - Left side view

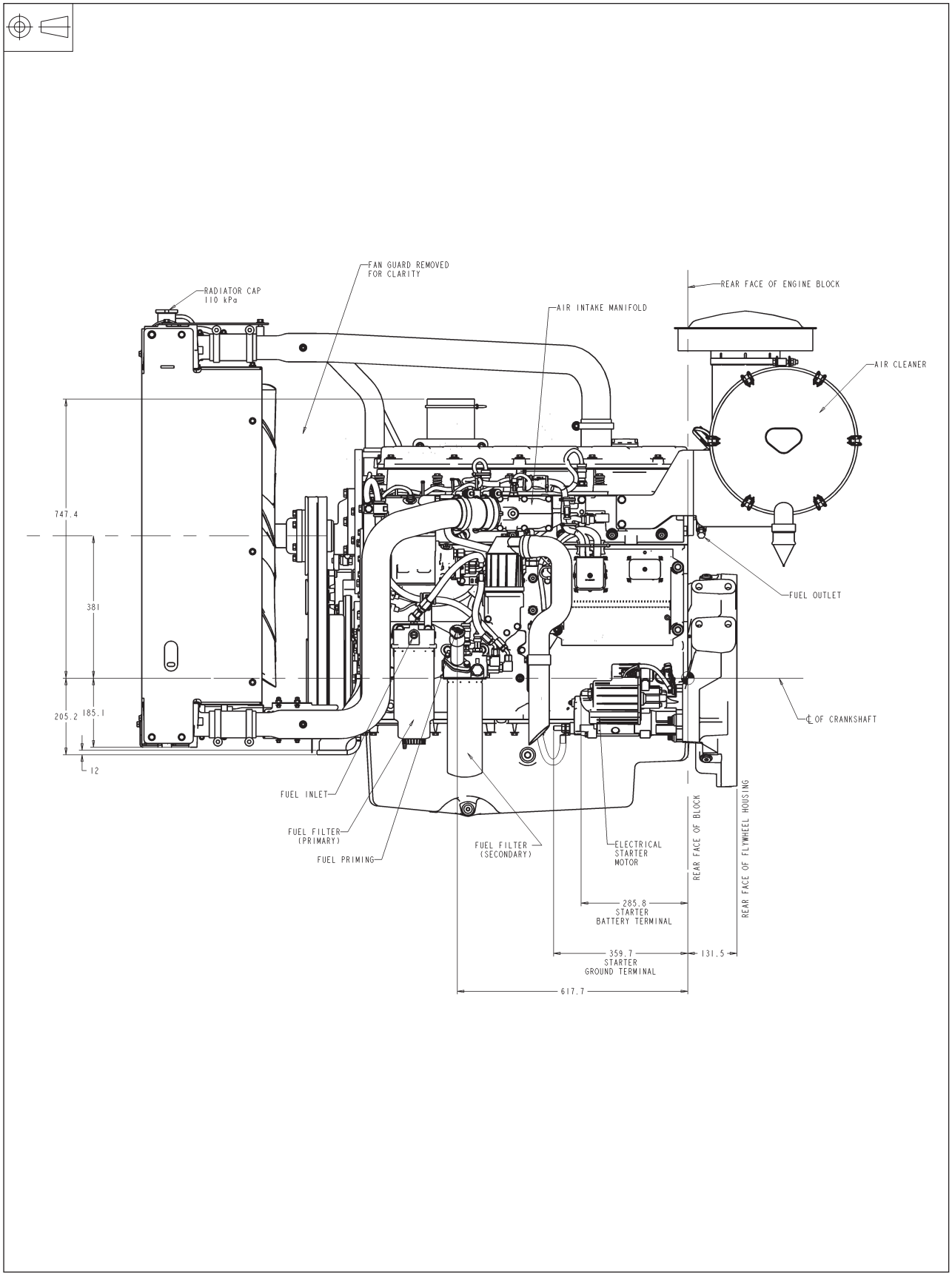

Publication No. TPD1951E4, January 2016.

Copyright © 2016 Perkins Engines Company Limited, all rights reserved. No part of this document may be reproduced in any form or by any means, without prior written permission of Perkins Engines Company Limited. The information in this document is substantially correct at the time of printing and may be altered subsequently.

Perkins Engines Company Limited
Peterborough, PE1 5FQ, United Kingdom
Tel: +44 (0)1733 583000
Fax: +44 (0)1733 582240
www.perkins.com

Perkins®
THE HEART OF EVERY GREAT MACHINE

1506A-E88TAG3 - Under view

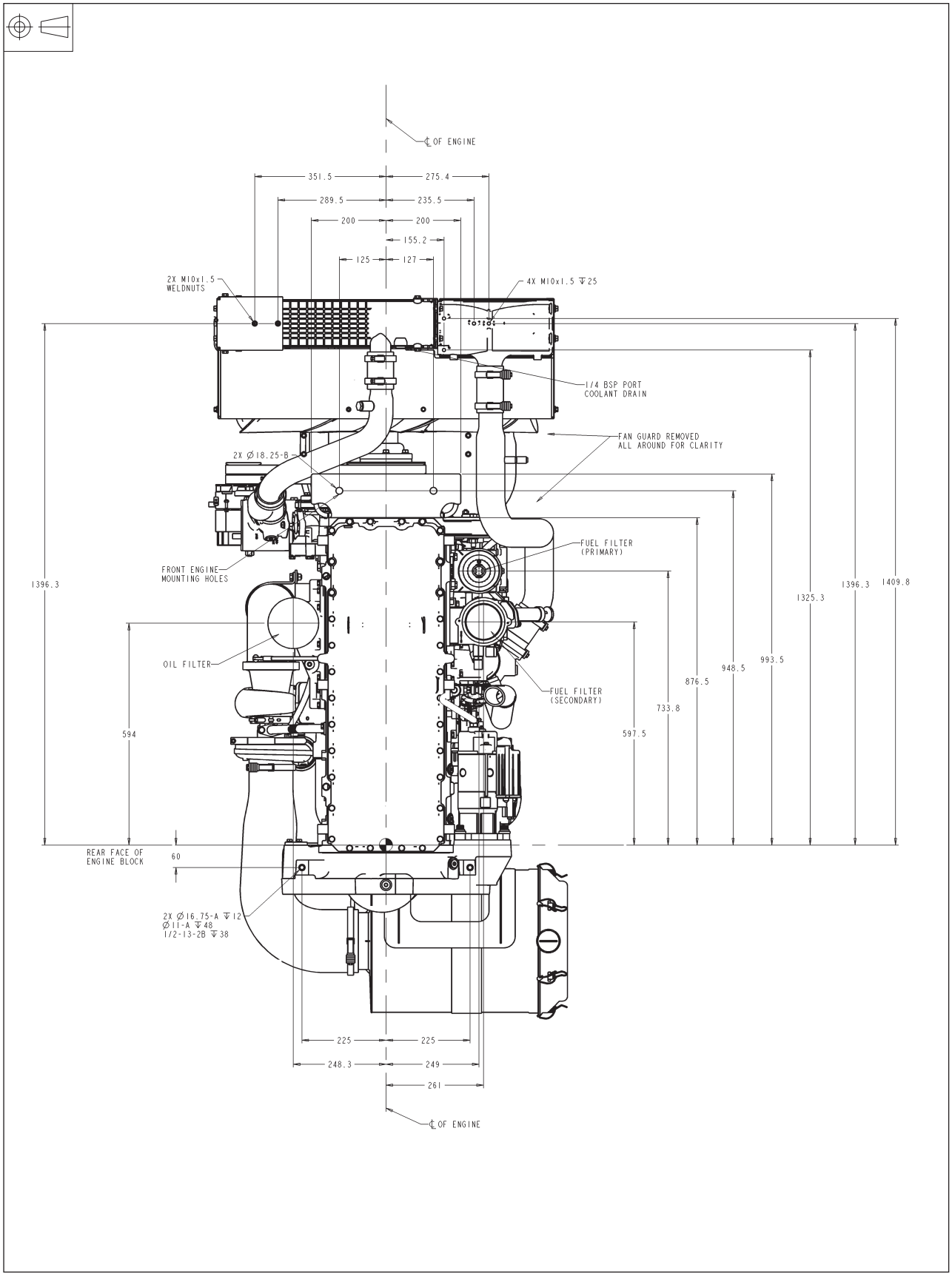

Publication No. TPD1951E4, January 2016.

Copyright © 2016 Perkins Engines Company Limited, all rights reserved. No part of this document may be reproduced in any form or by any means, without prior written permission of Perkins Engines Company Limited. The information in this document is substantially correct at the time of printing and may be altered subsequently.

Perkins Engines Company Limited
Peterborough, PE1 5FQ, United Kingdom
Tel: +44 (0)1733 583000
Fax: +44 (0)1733 582240
www.perkins.com

Perkins®
THE HEART OF EVERY GREAT MACHINE

1506A-E88TAG3 - Connection details

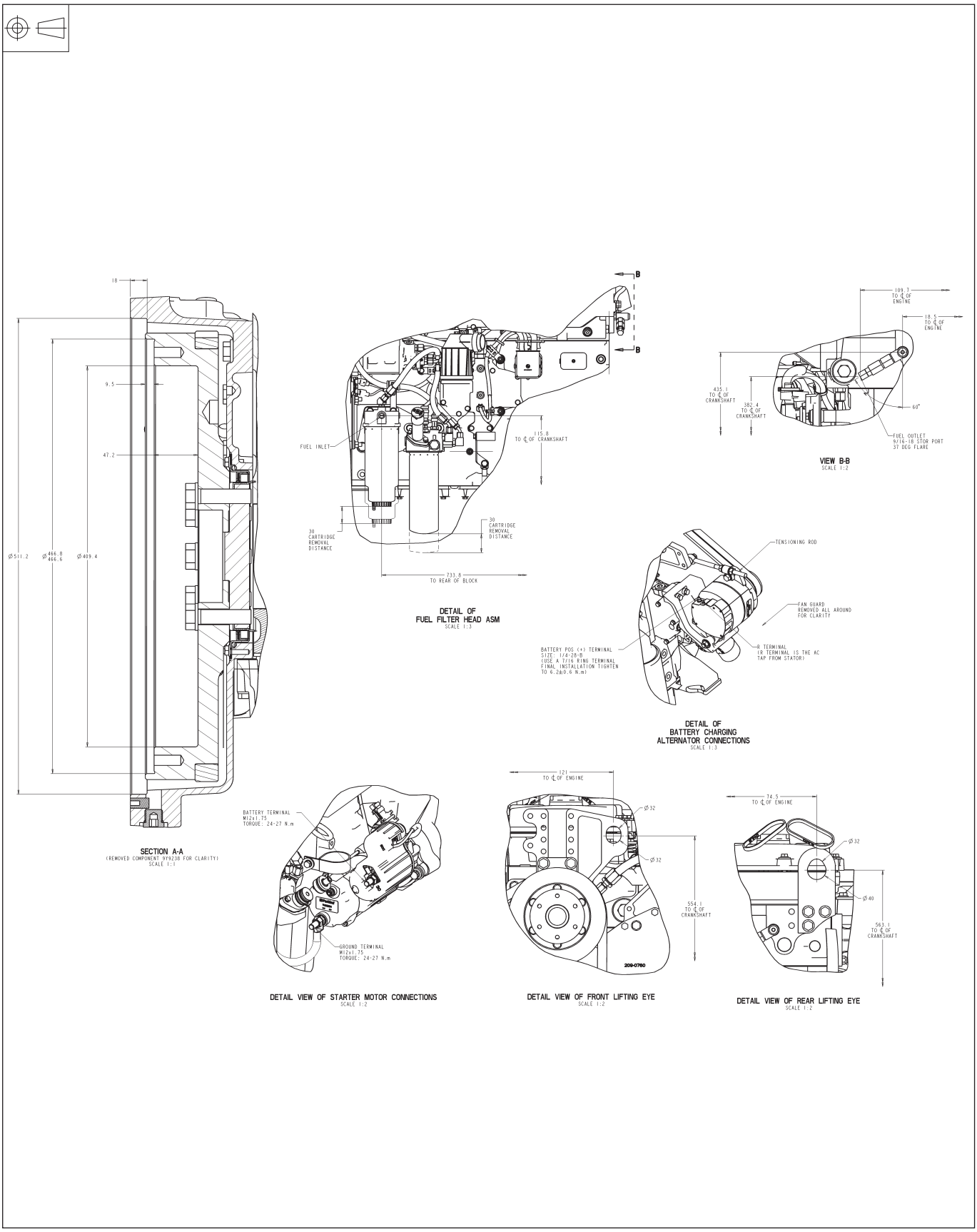

Publication No. TPD1951E4, January 2016.

Copyright © 2016 Perkins Engines Company Limited, all rights reserved. No part of this document may be reproduced in any form or by any means, without prior written permission of Perkins Engines Company Limited. The information in this document is substantially correct at the time of printing and may be altered subsequently.

Perkins Engines Company Limited
Peterborough, PE1 5FQ, United Kingdom
Tel: +44 (0)1733 583000
Fax: +44 (0)1733 582240
www.perkins.com

Perkins®
THE HEART OF EVERY GREAT MACHINE